Make Space.
Save Space.

# Quick Start Guide & Safety Information

FOLD / eFOLD

EN 17860 / EN 15194 / EN 82079-1

Version 01.2026

General Information / Related Documents ..... 3
Vehicle Identification ..... 4
Identification Plate and Frame Number ..... 4
Safety Instructions ..... 5
Overview of the Safety Instructions on the FOLD (Sticker) ..... 5
General Safety Instructions ..... 7
Safety Instructions for the Electric Drive System ..... 8
General Guidelines for Handling Electrical Components ..... 8
Battery and Charger ..... 8
Hazards Associated with the Battery ..... 9
Damaged Batteries ..... 9
Risks to Certain Groups of People, such as Children ..... 9
Safety Guidelines for Riding on Public Roads ..... 10
Safety Instructions for Folding Joints, Locks, Locking Pins, and Clamping Levers ..... 10
Intended Use ..... 11
Preventable Misuses ..... 11
Unavoidable Residual Risks ..... 12
Classification / Intended Use ..... 12
Maximum Allowable Gross Weight ..... 13
Carrying / Transporting Children and Cargo ..... 13
Before You Set Off ..... 15
Handling When Folded ..... 15
Handling When Unfolded ..... 15
Before Riding for the First Time ..... 15
Before Every Trip ..... 17
Folding the FOLD | eFOLD ..... 18
Unfolding the FOLD | eFOLD ..... 20

Contact AVNSON GMBH
Sternstrasse 81a, 20357 Hamburg, Germany
www.foldride.com / info@foldride.com

# General Information / Related Documents

This Quick Start Guide contains basic information on the safe use and handling of your FOLD.

In addition to this Quick Start Guide, detailed original instructions are available for your FOLD, providing further descriptions and additional information, as well as a separate manual for the electric drive system (System Manual).

In addition, other manufacturer instructions may apply to model-specific components of your FOLD (e.g., brakes, suspension components).

- Before using the FOLD for the first time, read this Quick Start Guide, the detailed original instructions, the system manual, and, if applicable, any additional manuals for model-specific components.

You can download the detailed original instructions for your FOLD, as well as any additional manuals that may apply to model-specific components, from the download portal on our website:

https://foldride.com/en-gb/support/#

- Keep this Quick Start Guide and the other applicable documents for future reference.
- Always include all instructions when passing your FOLD on to someone else.

# Vehicle Identification

## Identification Plate and Frame Number

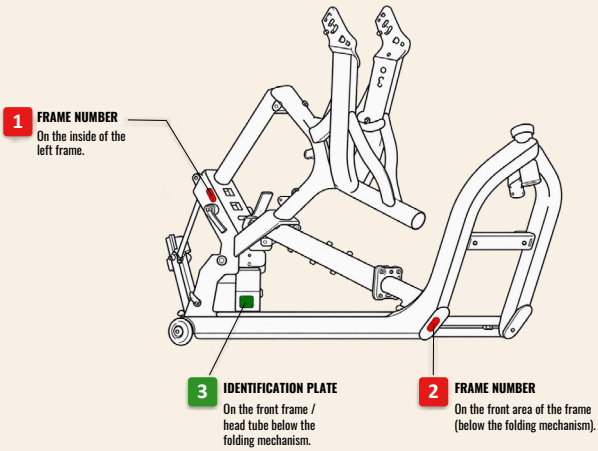


**IDENTIFICATION PLATE eFOLD (WITH CE)**

**IDENTIFICATION PLATE FOLD (WITHOUT CE)**

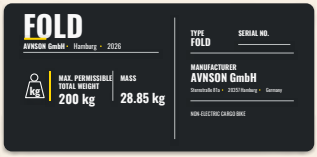


**Located on the front frame / head tube below the folding mechanism.**

**FRAME NUMBER**
Laser engraved

**IDENTIFICATION PLATE**
Sticker

**Do not remove or alter the identification plate, CE marking or frame number.**

# Safety Instructions

## Overview of the Safety Instructions on the FOLD (Sticker)

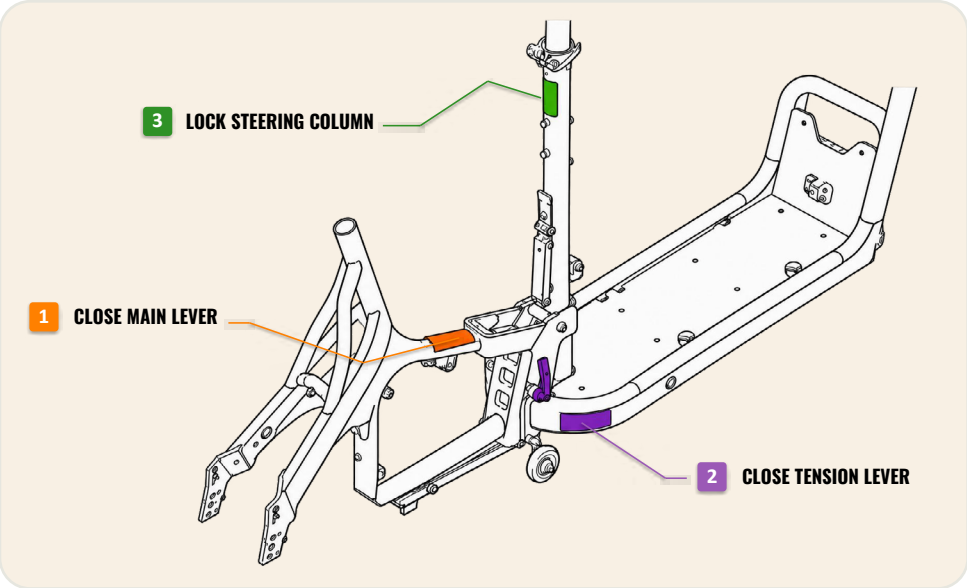


**Before every ride:**

Fully engage the locking pin of the box/platform

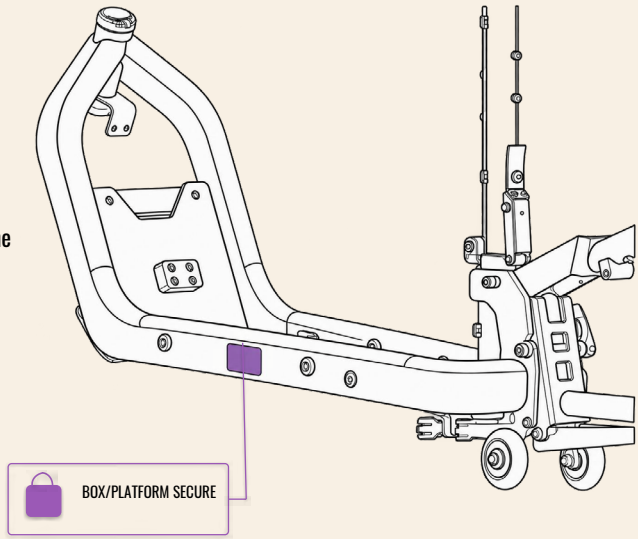

## General Safety Instructions

- Use your FOLD only for its intended purpose.
- Before using your FOLD, familiarise yourself with its operation and handling characteristics.
- Protect your FOLD from unauthorised access (e.g., theft, unsupervised use by children, etc.)
- Always wear an appropriate bicycle helmet (certified to BS EN 1078, with the CE or UKCA mark) when riding.
- Always ride attentively and anticipate what's ahead. Early detection allows you to respond more effectively to sudden (and potentially dangerous) events.
- Adjust your riding style and speed to the prevailing weather conditions and road surface conditions. Be especially aware of longer braking distances and reduced traction on icy, wet, slippery, or dirty surfaces.
- Always hold the FOLD with both hands on the handlebars while riding. Do not ride with one hand or without holding the handlebars.
- Before each ride, check the condition and functionality of safety-critical components (e.g., frame, folding joints, locks, locking pins, clamping levers, thru-axles, brakes, and screw connections). Do not use the FOLD if any components are damaged or not functioning properly.
- Do not make any modifications or repairs to the FOLD, and do not replace any components on your own.
- Have any damage repaired exclusively by your authorised dealer. Use only genuine replacement parts or components expressly approved by the manufacturer.
- Contact your authorised dealer if you are unable to perform certain tasks yourself or do not have the appropriate tools.
- Contact your authorised dealer for regular professional inspections.
- Have your FOLD inspected by your authorised dealer after an accident, a fall, or unusual stress.
- Check for wear and changes in components subject to high stress. Composite components may have hidden damage—have them inspected or replaced after a fall.
- **WARNING!** The FOLD is subject to wear and tear and high stress. Different materials and components may react differently to wear or continuous stress. If a component has exceeded its intended service life, it may suddenly fail, potentially causing injury to the rider. Any type of crack, gouge, or discolouration in high-stress areas indicates that the component has reached the end of its service life. In this case, please contact your authorised dealer to have the part replaced.

- **WARNING!** In the case of composite components, damage may not be detectable to the rider during a simple visual inspection. Components with “invisible” damage may break if continued to be used, posing a risk of falling and injury. Therefore, composite components must be sent to the manufacturer for inspection or destroyed and replaced if the FOLD has fallen or tipped over. To do so, please contact your authorised dealer.
- Do not exceed the maximum allowable total weight of your FOLD.
- Screw connections must be tightened to the correct torque values. If necessary, please contact your authorised dealer.
- Do not use the FOLD with loose screws or locks.
- Wear appropriate clothing while riding: clothing should be close-fitting, or if loose, secured (e.g., with trouser clips); avoid loose straps or shoelaces. Wear sturdy shoes with non-slip soles.

# Safety Instructions for the Electric Drive System

## General Guidelines for Handling Electrical Components

- There is a risk of electric shock and injury if electrical components are not handled properly.
- Always remove the battery when performing any work on the FOLD (e.g., cleaning, maintenance) or when transporting it.
- Tuning the electric drive system is prohibited and dangerous.
- Do not make any changes to or tamper with the electric drive.
- Do not open the components of the electric drive; they are maintenance-free. Have any necessary work performed exclusively by your authorised dealer.
- Repairs to the electric drive may only be performed by your authorised dealer using original replacement parts or components expressly approved by the manufacturer.
- **RISK OF BURNS!** The drive unit can become very hot during operation. Let it cool completely before touching it.
- Use the "Pushing Assist" feature only for pushing. Always hold the FOLD securely with both hands; the wheels must be in contact with the ground.

## Battery and Charger

- Use the FOLD only with a compatible genuine battery and a compatible genuine charger.
- Use the battery and charger only if they are undamaged.
- Check the battery and charger for damage before each use—especially the battery before each charging and insertion.
- Check the power cord, charging cable, and plug for damage before each use. Do not use the charger if you notice or suspect any damage.
- Charge only in dry, well-ventilated rooms away from direct sunlight and heat sources (recommended ambient temperature: 15–25 °C).
- Observe the permissible temperature ranges for the battery and charger.
- Heat is generated during the charging process. There is a risk of fire if heat builds up or if the device comes into contact with highly flammable substances.
  - Place the battery and charger on a heat-resistant, stable surface.
  - Do not cover the battery or the charger while they are charging, and protect both from impacts and drops.
- Never touch plugs with wet or damp hands. Avoid any contact between the charger, battery, or connectors and water or other liquids.
- Keep the battery and charger out of the reach of children and pets.
- Do not operate the charger without supervision. After charging, unplug the power cord from the socket.
- Do not kink the cables or lay them over sharp edges. Never pull on the cord to unplug a plug; always pull on the plug itself.
- Make sure the socket's voltage matches the specifications on the charger.
- It is best to charge the battery during the day in a dry room equipped with a smoke/fire alarm.

## Hazards Associated with the Battery

- **WARNING!** Improper handling may result in a fire or explosion hazard.
- Keep the battery away from open flames and other heat sources.
- Never short-circuit the battery.
- Never store or transport the battery near metal objects (e.g., coins, paper clips, screws) → Risk of short circuit!
- Always store the battery in a dry, frost-free place, away from living areas and flammable materials.
- Transport the battery only in suitable, shock- and fire-resistant containers.
- Never dispose of the battery with household waste. Please return defective or old batteries to your authorised dealer or an authorised collection point.

## Damaged Batteries

- Have your authorised dealer inspect the battery after any drops or hard impacts.
- Never open, disassemble, puncture, or deform the battery.
- Always wear protective gloves, safety glasses, and appropriate protective clothing when handling damaged batteries.
- Spilled liquid may be corrosive:
  - If the product comes into contact with the skin: Immediately rinse the affected area thoroughly with water.
  - In case of eye contact: Rinse immediately with plenty of water and seek medical attention right away.
- If the battery catches fire: Get yourself to safety immediately, cordon off the area where the fire is, and call the fire brigade.
  **WARNING!** Do not attempt to extinguish the battery with water.

## Risks to Certain Groups of People, such as Children

- The battery and charger must not be used by children or persons with limited physical, sensory, or mental abilities unless they are supervised or instructed while doing so.
- Children must not remove or insert the battery or charger, or play with them.
- Children may clean and perform user maintenance only under supervision.
- Always keep the battery and charger out of the reach of children.
- Secure the FOLD so that unauthorised persons (especially children) cannot access it.

## Safety Guidelines for Riding on Public Roads

- To be used on public roads, your FOLD must be fitted with two independent brakes (front and rear) under UK law. A working front white light, rear red light, and red rear reflector are required when riding between sunset and sunrise; a bell is recommended but not a legal requirement.
- Your eFOLD qualifies as an Electrically Assisted Pedal Cycle (EAPC) if it has a motor rated up to 250 W (0.25 kW), assistance that cuts out at 25 km/h (15.5 mph), and is propelled by pedalling. A compliant eFOLD can be ridden on public roads without a licence, registration, tax, or insurance; riders must be at least 14 years old.
- Please be aware of and follow local authority and regional regulations governing road use (e.g., use of cycle lanes), and refer to The Highway Code for cyclists.

  You can obtain further information from the Department for Transport or your local authority.
- Always ride defensively and be mindful of other road users.
- Wear bright or reflective clothing so you can be seen more easily.
- Turn on your lights even during the day to make yourself even more visible.
- Do not ride if you have previously consumed alcohol, drugs, or medications that impair your judgement.
- Do not use mobile devices (e.g., smartphones, tablets) or headphones while riding.
- Make adjustments—such as turning on the lights—only when stopped; avoid distractions while riding.
- Plan your route with range in mind; cold weather, frequent starts, hills, and headwinds reduce range.

## Safety Instructions for Folding Joints, Locks, Locking Pins, and Clamping Levers

- **WARNING!** Risk of a serious accident due to improperly locked folding joints, locks, locking pins, and clamping levers.
- Before every ride, make sure that all folding joints, locks, locking pins, and clamping levers (e.g., on the frame, saddle and seat post, steering column, handlebars, pedals, and luggage rack) are fully closed and properly locked in place.
- Make sure you can hear or feel all the locks and locking pins engage.
- Regularly inspect all folding joints, locks, locking pins, and clamping levers for play, wear, or damage.
- Do not use the FOLD if the folding joints, locks, locking pins, or clamping levers are not functioning properly.
- Never reach into the mechanism while folding or unfolding the device to avoid pinching or cutting injuries.
- Have your authorised dealer inspect damaged or stiff folding joints, locks, locking pins, and clamping levers immediately and have them repaired if necessary.
- Do not use the folding joints or locks to lift or carry the FOLD.
- Do not subject folding joints, locks, locking pins, and clamping levers to loads exceeding their intended use (e.g., do not attach any additional loads).

# Intended Use

Your FOLD is intended for use in accordance with the category to which it is assigned (see Chapter Classification / Intended Use, page 12).

The maximum allowable total weight of the FOLD must not be exceeded (see Chapter Maximum Allowable Gross Weight, page 13).

The FOLD is designed for personal use. When used for commercial purposes (e.g., rental), the FOLD is subjected to significantly greater wear and tear compared to private use. For this reason, commercial use is prohibited.

Neither the manufacturer nor the authorised dealer assumes liability for damage resulting from improper use. The warranty is void if the FOLD is not used as intended.

Use the FOLD only as described here and in the original instructions. Any other use is considered improper and may result in accidents, serious injuries, or property damage to the FOLD or other objects.

## Preventable Misuses

To ensure safe use of your FOLD, avoid the following improper uses:

- Use of the FOLD for purposes other than those for which it is intended.
  If you use the FOLD for purposes other than those for which it was designed, this may result in component failure, material breakage, and/or loss of function of critical systems (e.g., brakes). This can result in falls and serious injuries.
- Using the FOLD for purposes other than those intended, such as competitions, jumps, stunts, or tricks.
- Exceeding the maximum allowable gross weight.
- Making structural modifications to the FOLD, tuning it, or otherwise tampering with the FOLD.
- Repairs and maintenance performed improperly, as well as repairs and maintenance performed by unauthorised persons.

## Unavoidable Residual Risks

Despite the manufacturer's carefully engineered design, certain residual risks remain unavoidable when using the FOLD. This also applies if you, as the rider, follow the guidelines for proper use and observe all safety and warning instructions.

The residual risks can only be reduced, not completely eliminated, and it is important that you are aware of this when using your FOLD.

Residual risks include, among others:

- Sudden changes in road conditions, such as “black ice” or freezing wetness.
- Distractions from or caused by traffic.
- Unexpected manoeuvres by other road users.
- Unpredictable material defects or signs of wear that could lead to material failure or malfunctions.
- Misjudgements regarding:
  - the traction of your FOLD,
  - one's own speed or the speed of other road users,
  - one's own abilities or the abilities of other road users.

## Classification / Intended Use

Your FOLD is a single-track cargo bike for personal use in accordance with EN 17860-2.

It is intended for the following use:

- Maximum allowable gross weight: up to 200 kg See Chapter “ Maximum Allowable Gross Weight,” page 13.
- Typical average speed: about 15–25 km/h (9–15.5 mph).
- Maximum drop/jump height: < 70 mm (e.g., kerbs).
- Intended Use: Commuting and recreational rides involving moderate exertion.
- Typical designs: Long John bike, longtail bike.
- Required riding skills: It is recommended that you get used to the FOLD before riding it on public roads.

This product is**not** intended for off-road use, on trails, or for jumps exceeding the specified limits.

## Maximum Allowable Gross Weight

You can find the maximum allowable gross weight for your FOLD on the identification plate on your FOLD.

- The maximum allowable gross weight must not be exceeded.

The following loads must be taken into account when calculating the gross weight:

| | | |
|---|---|---|
| Kerb Weight FOLD<br>+<br>Rider Weight (max. 110 kg)<br>+<br>Weight of luggage, child seat, and trailer (including cargo) | = | Maximum Allowable Gross Weight |

## Carrying / Transporting Children and Cargo

You may only carry children or transport cargo on your FOLD on routes where this is permitted and using the appropriate equipment.

- When transporting cargo on the cargo area, follow the instructions in the section " Cargo Area, Page 13."
- When transporting children and cargo in the cargo box, please follow the instructions in the section Cargo Box, Page 14
- When transporting children and cargo in a trailer, please follow the instructions in the section Trailer, Page 14.
- When transporting children in a child seat on the luggage rack, please refer to the information in the section at Child Seat, Page 14.

**IMPORTANT:** For detailed information on approved passenger seats and other transportation accessories, please contact your authorised dealer.

### Cargo Area

If your FOLD is equipped with only a cargo area, you can generally use it to transport cargo.

In general, the following applies to the transport of cargo:

- The load must be properly secured to prevent it from falling off or slipping (e.g., with tie-down straps).
- The load must not obstruct the rider's view or distract the rider.

## Cargo Box

If your FOLD is equipped with a cargo box, you can generally use it to carry children and cargo.

In general, the following applies to the transport of children and cargo:

- Children may only be transported in approved child safety seats (e.g., a child seat inside the cargo box).
- Children must be properly secured (e.g., with a seat belt in a child safety seat).
- Children must wear an approved helmet.
- The load must be properly secured to prevent it from falling off or slipping (e.g., with tie-down straps).
- Children and cargo must not obstruct the rider's view or distract the rider.

## Trailer

The FOLD may only be used to tow trailers if it is approved for that purpose.

You can find this information in the vehicle passport.

In general, the following applies when using your FOLD with a trailer:

- Only trailers with two wheels arranged side by side are permitted.
- The use of single-track trailers is not permitted.
- The maximum towing capacity (trailer plus payload) must not be exceeded.

## Child Seat

Child seats on the luggage rack may only be mounted on your FOLD, and the FOLD may only be used with a child seat, if your FOLD is approved for this purpose.

You can find this information in the vehicle passport.

In general, the following applies when using your FOLD with a child seat:

- Have the child seat installed only by an authorised dealer.
- Have child seats installed only if your FOLD is compatible with them. Ask your authorised dealer about suitable child seats.
- Child seats may only be mounted on luggage racks, and only if the specific luggage rack is approved for use with a child seat.
- Child seats mounted on the seatpost or seat tube are not permitted.
- Children weighing more than 15 kilograms may not be transported in a child safety seat.

# Before You Set Off

Your FOLD is ready to ride:

- It was fully assembled and adjusted by your authorised dealer.
- Your authorised dealer has shown you how to fold and unfold your FOLD, as well as its key features.

## Handling When Folded

- Push or carry your FOLD only when it is fully locked in the folded position.
- When moving the FOLD, make sure that no body parts (fingers, hands) can get caught in the folding mechanism.
- Always lift the FOLD by the designated frame area, not by any moving parts or components.
- When transporting your FOLD by car, train, or bus, be sure to observe the permitted dimensions and the kerb weight of your FOLD.

## Handling When Unfolded

- Unfold your FOLD only on level surfaces and in accordance with the detailed original instructions.
- Make sure that all folding joints, locks, locking pins, and clamping levers are fully closed and properly secured after unfolding.
- Be careful not to let your fingers, hands, or other body parts get caught in the folding mechanism when unfolding the device.
- Never ride with folding joints, locks, locking pins, or clamping levers that are partially open or unlocked—there is a risk of an accident.
- After each time you unfold your FOLD, check that all safety-related components (e.g., brakes, handlebars, pedals) are in good working order.

## Before Riding for the First Time

Before riding for the first time, you must familiarise yourself with your FOLD and how to operate it.

Seating Position (Saddle/Handlebar Height)

- Adjust the saddle and handlebars to the correct height for you (the rider) to achieve the optimal riding position.
- Check to see if the seating position is comfortable even on longer rides and if you can safely operate all the controls on the handlebars while riding.
- When adjusting the saddle height, make sure to observe the minimum insertion depth of the seatpost. The minimum insertion depth is marked on the seatpost.
- Check the preload and ensure that the clamping devices/clamping levers are securely fastened.
- Clamping levers must rest against the corresponding component when closed.

### Handling Characteristics

- Make sure your FOLD is ready to use before your first ride.
- Practise riding so you can get used to how your new FOLD handles.

  The handling characteristics of a FOLD (a cargo bike **without** an electric motor) differ from those of a conventional bicycle.

  Please note in particular:
  - the higher kerb weight,
  - the change in weight distribution caused by the cargo area,
  - the unusual steering response (especially at low speeds),
  - the extended braking performance, especially when fully loaded,
  - the increased risk of tipping when the load is uneven or when turning.

  The handling characteristics of an eFOLD ( **electric cargo** bike) also differ from those of a FOLD without a motor.

  Please note the following in particular:
  - the overall increase in weight due to the battery and drive system,
  - the increased stress on braking and drivetrain components,
  - the potential for higher average speeds and, if necessary, riding on more challenging routes.
  - the change in handling when pulling away with motor assistance (higher torque, risk of slipping when loaded),
  - greater wear on the drive and brake components due to the additional forces.

### Prepare the Brakes

- Hydraulic brakes: Pull both brake levers several times to centre the brake pads in the caliper.
- Disc brakes: Start by bedding in the disc brakes.

  For detailed information on bedding in disc brakes, please refer to the detailed original instructions.

### Operating Components (while riding)

- Practise using the drive system (setting/changing the assistance level, etc.) until you can operate the electric drive (without it distracting you).
- Practise shifting gears until you can operate the gearshift (without it distracting you).
- Practise operating the brakes (including brake lever assignments) until you can operate each brake (without it distracting you).
- Contact your authorised dealer if you want to have the brake lever assignments changed.

### Braking Characteristics

- Familiarise yourself with the braking characteristics of your brakes (away from traffic, at low speeds).

## Before Every Trip

Inspecting the FOLD before each ride, as described below, significantly reduces the risks associated with its use and must therefore be carried out as part of its intended use.

### Overall Condition / General Roadworthiness

- Check the overall condition of your FOLD / frame (visual inspection).
  - The frame and attachments must not have any cracks, gouges, damage, or discolouration.

### Battery

- Check the battery for damage.
  Never use a damaged battery. There is a risk of explosion!
- Check the battery's charge level and recharge it if necessary.
- Make sure the battery is inserted correctly and that you can hear or feel it lock into place.

### Brakes

- Check that all brakes are working properly. Push your FOLD while applying the brake: The braked wheel must lock up.

### Gear Shift

- Check that the gearshift is working properly by shifting through all the gears.
  There should be no unusual noises or blockages.

### Pedal Drive

- Check the pedal mechanism to ensure it is functioning properly and is securely fastened.

### Screw and Plug Connections

- Check all screw and plug connections to ensure they are secure (visual inspection).

### Folding Joints / Locks / Locking Pins / Clamping Levers

- Make sure that all folding joints, locks, locking pins, and clamping levers are fully closed and properly secured after unfolding.
- Check the preload and ensure that the clamping devices/quick-release fasteners are securely fastened. Clamping levers must rest against the corresponding component when closed.

### Handlebars, Steering Column, and Stem

- Check that the handlebars, steering column, and stem are securely fastened.

### Tyres and Wheels

- Check the tyres for cracks, foreign objects, and tyre pressure.
- Check the rims for damage.
- Check the spokes for even tension (spoke tension).

### Lighting

- Check that the headlights and taillights are working properly.

### Bell

- Check that the bell is working.
  When the bell is rung, a clear sound must be heard.

# Folding the FOLD | eFOLD

## Place the FOLD on its kickstand

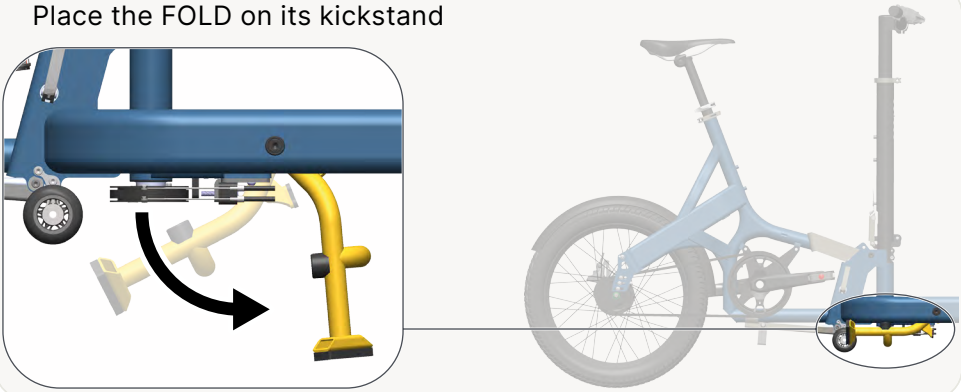

## Fold in the pedals

## Rotate the saddle 180° and lower it

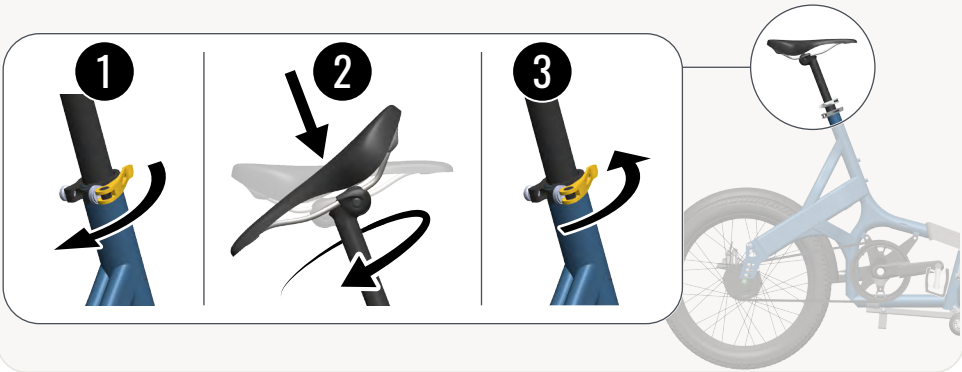

## Unlock and fold the steering column

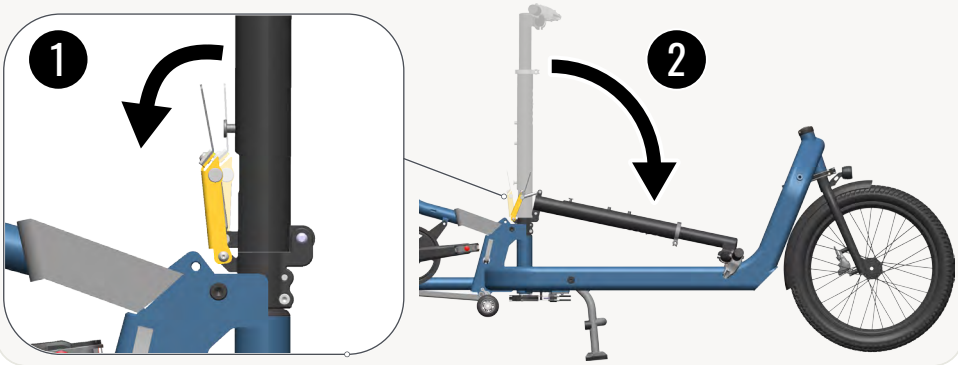


## Unlock the clamping lever - fold in the rear section & secure with strap

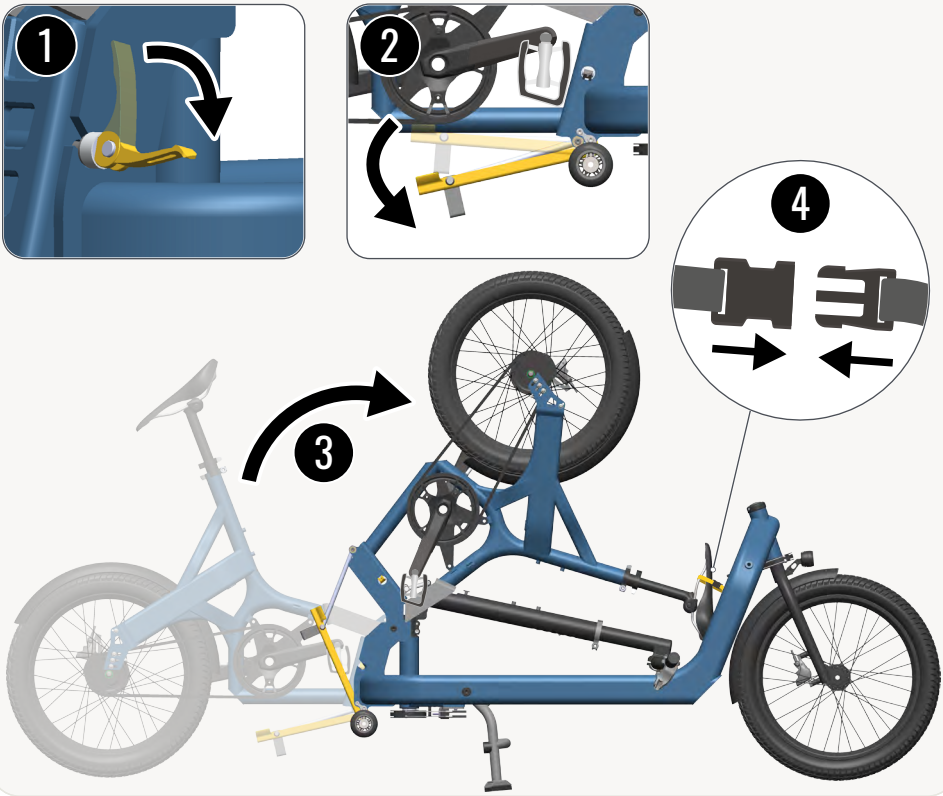

## Unfolding the FOLD | eFOLD

Release the strap & unfold the rear section – lock the clamping lever

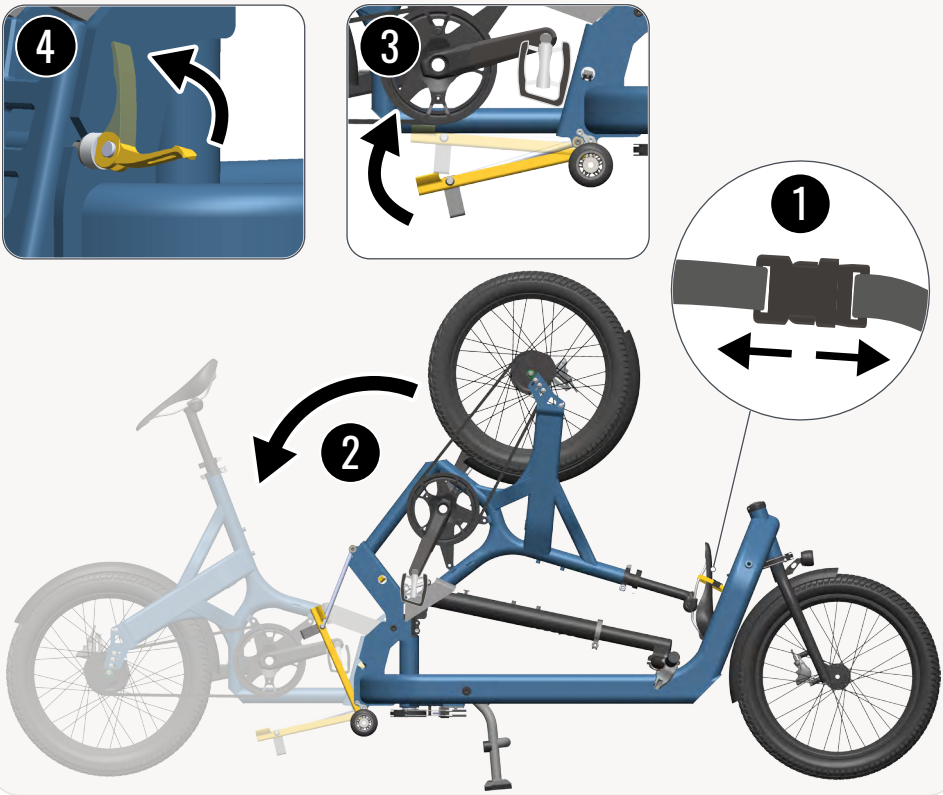


Rotate the saddle 180° and raise it

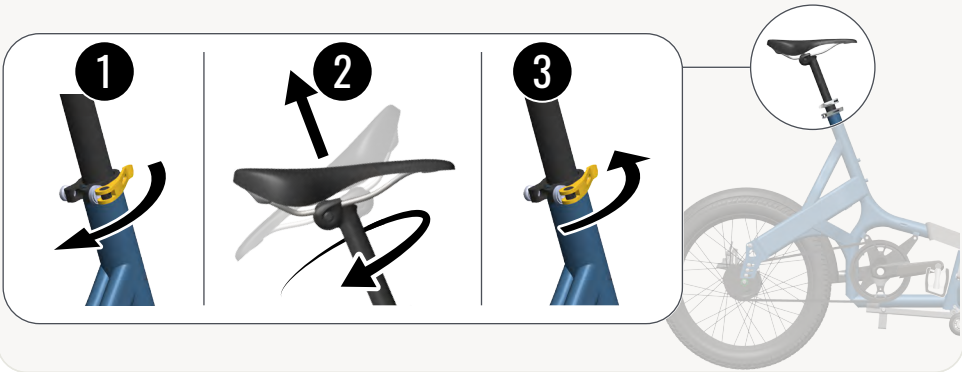

## Raise and lock the steering column

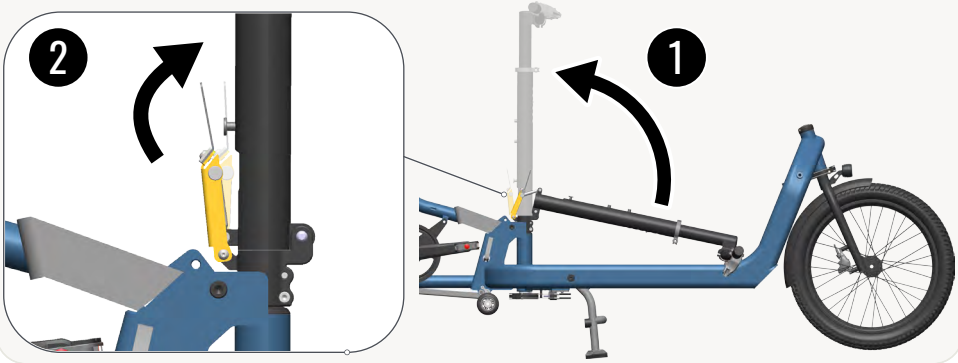


## Fold out the pedals

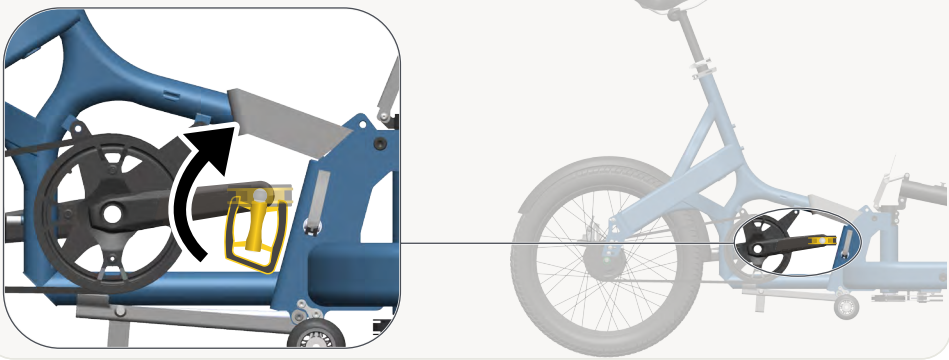
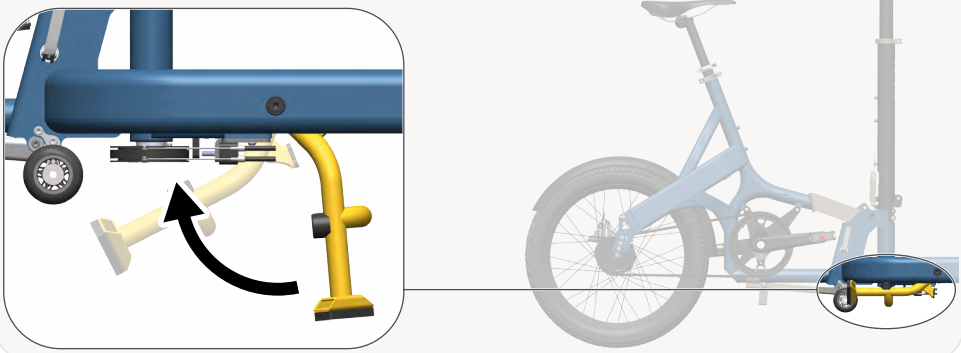
## Retract the kickstand