BASKET PRO

Operating and assembly instructions

For FOLD and eFOLD

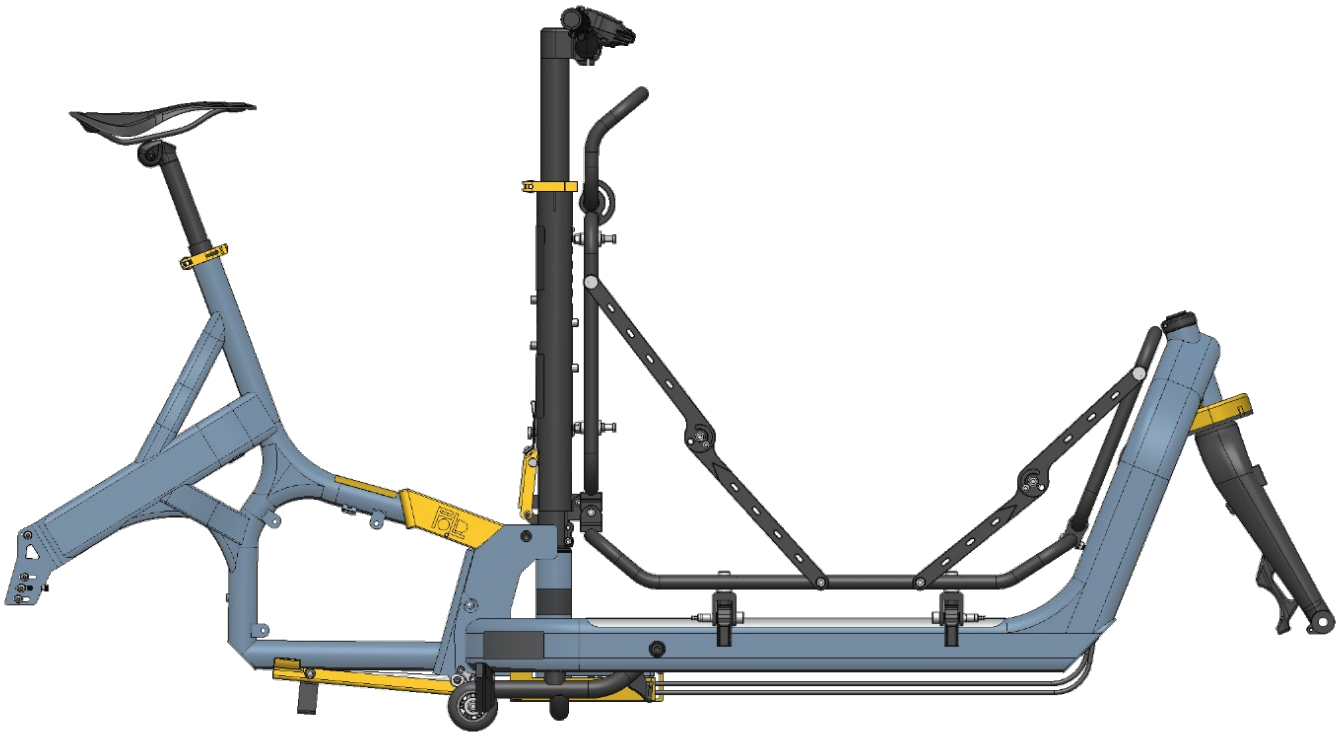

Attach · Unfold · Fold · Remove

OPERATING AND ASSEMBLY INSTRUCTIONS

General information

This manual and related documents

This manual provides the basic instructions for attaching, unfolding, folding and removing your Basket Pro.

The Quick Start Guide & Safety Information and the full original operating instructions for your FOLD also apply. Read all three documents before first use.

Keep this manual and the related documents for future reference. Pass on all instructions if you give or sell the Basket Pro or your FOLD to another person.

Current instructions

The full original operating instructions and the current version of this manual are available from the download portal:

https://foldride.com/de/support/

Contents

Section	Pages
Use, safety and transport	3–5
Components, supplied parts and preparation	6–8
Attaching, unfolding, folding and removing	9–13
Checks, cleaning, care and disposal	14–15
Child seat and infant carrier adapter	16

Manufacturer: AVNSON GmbH · Sternstraße 81a · 20357 Hamburg
www.foldride.com · info@foldride.com

OPERATING AND ASSEMBLY INSTRUCTIONS

Intended use

The Basket Pro is approved for carrying up to two children and transporting cargo on all FOLD and eFOLD variants:

Model	Type
FOLD	Cargo bike without electric assistance
eFOLD	Cargo bike with electric assistance

Load limits

Maximum Basket Pro payload: 80 kg

The 80 kg includes the child seat, other accessories, children and luggage combined.

Do not exceed the maximum Basket Pro payload or your FOLD's maximum permitted total weight of 200 kg (see the identification plate). Include the weight of the Basket Pro and its contents.

Misuse to avoid

- Use on vehicles that are not approved.
- Exceeding the maximum payload or permitted total weight.
- Riding with the Basket Pro partly unfolded or not fully locked.
- Carrying children without an approved child transport system.
- Modifying or tampering with the Basket Pro.

Use the Basket Pro only as described here and in the original operating instructions. Any other use may cause accidents, serious injury or property damage. The Basket Pro is not a toy.

OPERATING AND ASSEMBLY INSTRUCTIONS

Safe handling

Before first use

- Use the Basket Pro only for its intended purpose.
- Before your first ride, become familiar with handling the Basket Pro and with the changes to your FOLD's riding characteristics.
- Keep small parts, such as ball-lock pins, and packaging away from children. They pose choking and injury hazards.

During all assembly and folding operations

- Do not leave the Basket Pro or FOLD unattended while working on them.
- Never reach into joints or locking areas. Keep hands and fingers clear of these areas.
- Do not use joints, brackets or locking mechanisms to lift or carry the Basket Pro or your FOLD.

Spare parts, repairs and assistance

- Use only original spare parts and accessories approved by the manufacturer.
- Do not modify or repair the Basket Pro yourself. Have any damage repaired by your dealer.
- Contact your dealer if you are unsure how to use the product.

OPERATING AND ASSEMBLY INSTRUCTIONS

Carrying children and cargo

Carrying children

- Carry no more than two children. Use only child transport systems approved for the Basket Pro, such as a child seat.
- Secure children correctly, for example with the child seat harness. Children must wear an approved helmet.
- Never leave children unattended while getting in or out, or while sitting in the Basket Pro.

Your dealer can provide detailed information about approved child transport systems.

The 80 kg payload includes the child seat, accessories, children and luggage combined. Also observe the weight and use limits of the child transport system. Child seat information is on page 16.

Securing cargo

- Secure cargo against falling out or shifting, for example with suitable straps.
- Cargo must not project beyond the sides of the Basket Pro. Distribute the weight evenly.
- Children and cargo must not obstruct your view or distract you.

Changes to riding characteristics

Additional weight and changed dimensions affect steering. Braking distances increase, especially when fully loaded. Uneven loading and cornering increase the risk of tipping over.

WARNING

Adjust your riding style and speed to the load.

OPERATING AND ASSEMBLY INSTRUCTIONS

Components and locking mechanisms

Front and rear refer to the direction of travel.

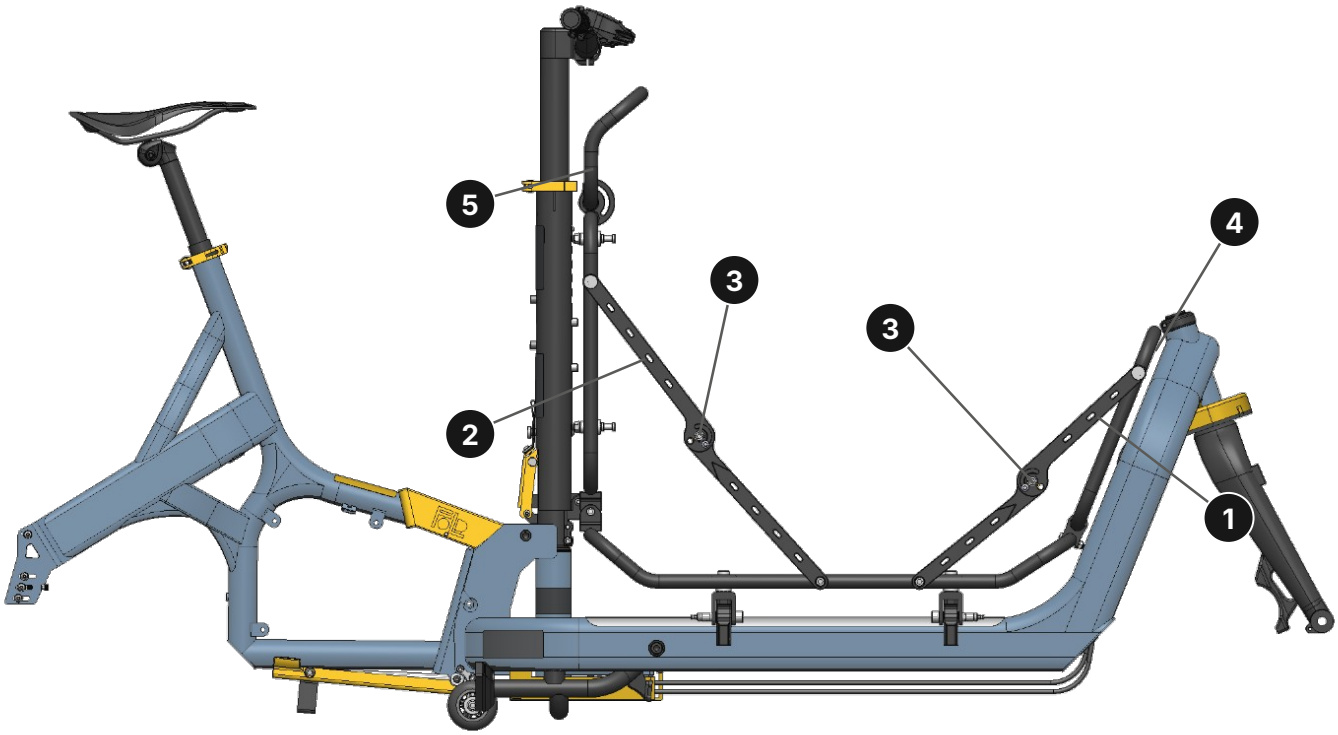

Rear Front

No.	Description
1 / 2	Front / rear bracket
3	Toggle levers (2×)
4 / 5	Front / rear basket section
6	Locking pins (2×), detail on page 10
7	Ball-lock pins (2×), detail on page 10

Brackets (1/2) and basket sections (4/5) are separate components. Follow the unfolding and folding sequence on pages 11 and 12.

OPERATING AND ASSEMBLY INSTRUCTIONS

Toggle levers in detail

Pull both toggle levers fully upward. Press the front and rear basket sections downward by hand. Both must resist the pressure and must not fold down.

Front bracket (1) and toggle lever (3)

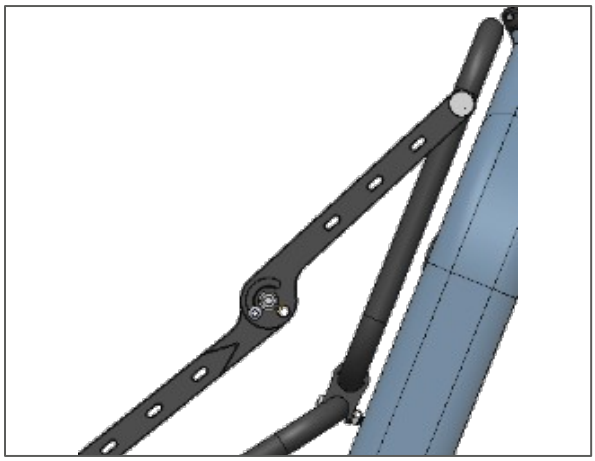

State shown: unfolded

Unfolding

Raise the bracket. Pull the toggle lever fully upward and check that it is locked.

Rear bracket (2) and toggle lever (3)

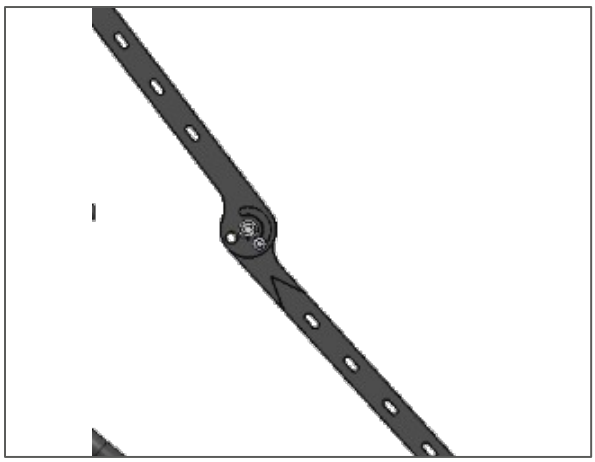

State shown: unfolded

Folding

Press the front and rear brackets down to release both toggle levers.

OPERATING AND ASSEMBLY INSTRUCTIONS

Supplied parts and preparation

Checking the supplied parts

Quantity	Component
1	Basket Pro
2	Ball-lock pins

The fabric cover, mounting receiver and fasteners are also supplied.

Before first use, check that all parts are present. Inspect all components for damage, sharp edges or burrs. Contact your dealer if any parts are missing or damaged.

Accessories

Use only accessories approved by the manufacturer. Follow the relevant accessory instructions. Handling may differ.

Sold separately and approved for the Basket Pro: child seat, rain cover and infant carrier adapter. These accessories are not included in the supplied parts.

Mounting receiver on the FOLD

The FOLD is supplied with the mounting receiver already installed. The following steps describe how to attach the folded Basket Pro to this receiver.

Attach and unfold the Basket Pro

Procedure 1 – Attach the folded Basket Pro

Preparation

Make sure the FOLD is standing securely on level ground. The Basket Pro must be empty. Keep children away. Follow the installation requirements on page 8.

1 **Support the folded Basket Pro and align the mounting points. Hold down each button and fully insert both ball-lock pins (7). Release each button and check that the pins are locked (page 14).**

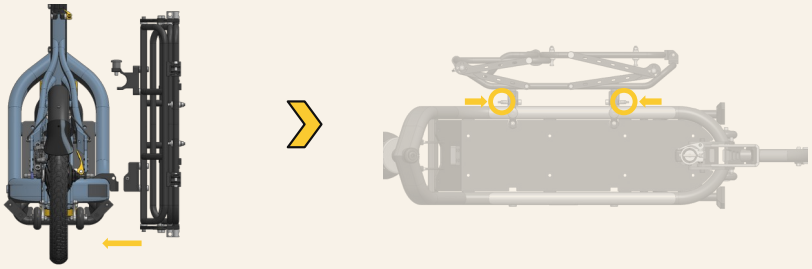

Position the Basket Pro

Press the button · Insert the pin

2 **Carefully swing the fully folded Basket Pro horizontally inward.**

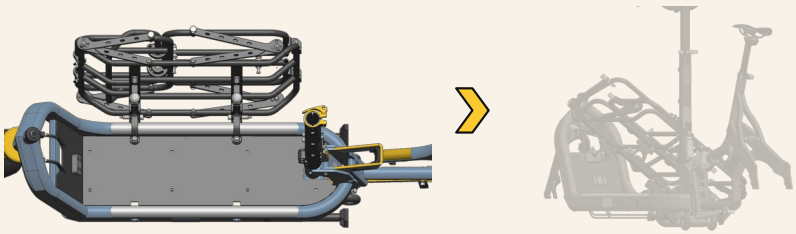

Swing horizontally inward

3 **Fully engage both locking pins (6). Check that both pins are engaged and the Basket Pro is securely attached.**

Engage both locking pins

Pin details: page 10

⚠ **Pinch hazard: Keep hands and fingers clear of joints and locking areas when attaching and unfolding the Basket Pro.**

OPERATING AND ASSEMBLY INSTRUCTIONS

Pins in detail

7 Ball-lock pins

To insert: hold the button and fully insert the pin. Release the button, listen or feel for engagement and check that it is locked. To remove: support the Basket Pro, hold the button and pull out the pin. Repeat on both sides.

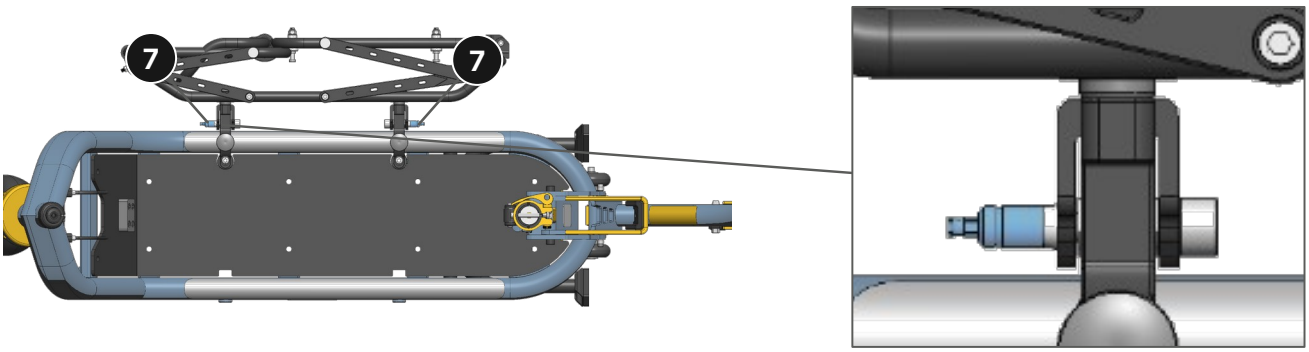

Mounting receiver, top view

Enlarged detail

6 Locking pins

Fully engage both locking pins. Listen or feel for engagement. For removal, pull both locking pins outward before swinging the folded Basket Pro outward.

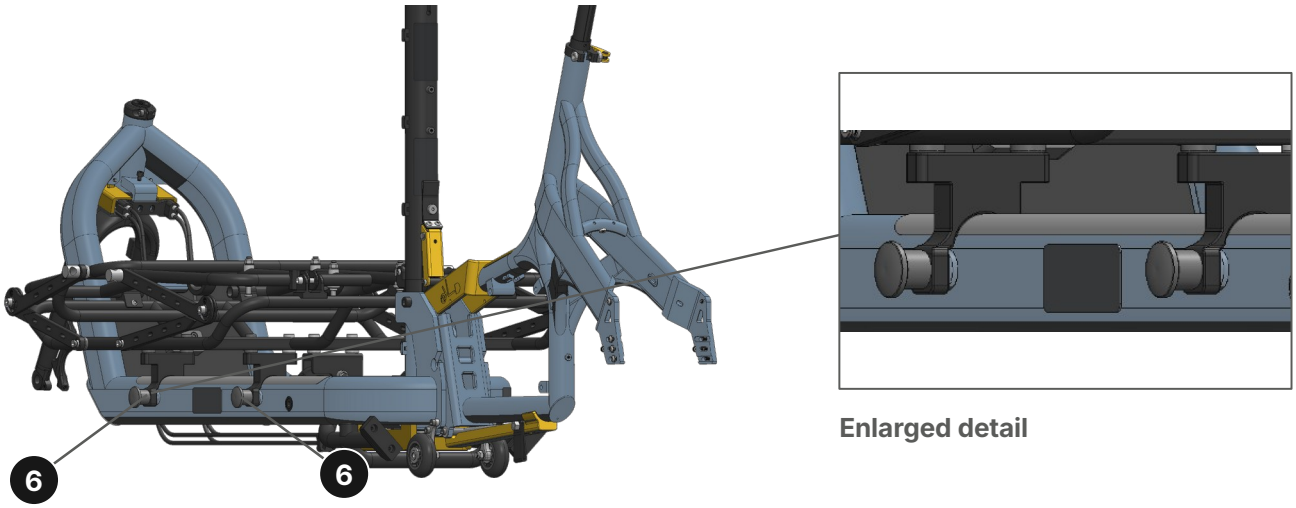

Enlarged detail

Operate both locking pins

The enlarged details show the same components as the overview. Always check both sides.

Attach and unfold the Basket Pro

Procedure 2 – Unfold the Basket Pro

1 **Carefully unfold the Basket Pro upward.**

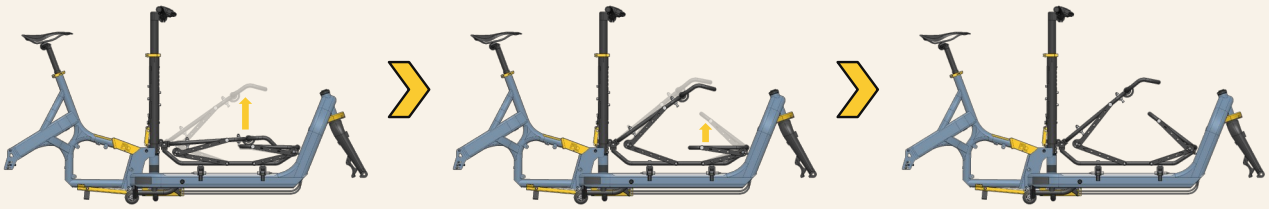

Fully folded | Continue unfolding | Intermediate position

2 **Fully raise the front basket section (4) and the rear basket section (5).**

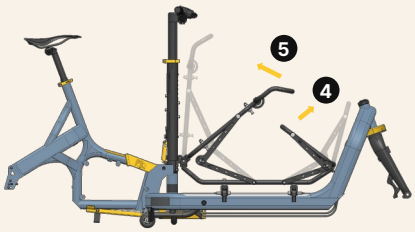

3 **Raise the front bracket (1) and the rear bracket (2). Pull both toggle levers (3) fully upward. Check the locks as described on page 14.**

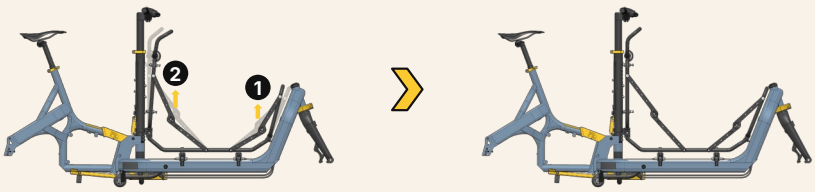

Lock both toggle levers | Fully unfolded and locked

Components: page 6. Enlarged toggle levers: page 7

Final check

Before riding, check both ball-lock pins (7), both locking pins (6) and both toggle levers (3). Carry out the checks on page 14. Do not ride if any lock is incomplete or you are unsure.

⚠ **Pinch hazard: Keep hands and fingers clear of joints and locking areas when attaching and unfolding the Basket Pro.**

Fold and remove the Basket Pro

Procedure 1 – Fold the Basket Pro

Preparation

Make sure the FOLD is standing securely on level ground. Remove children and all cargo from the Basket Pro. Keep children away from the work area.

1 **Press the front bracket (1) and rear bracket (2) down to release the toggle levers (3).**

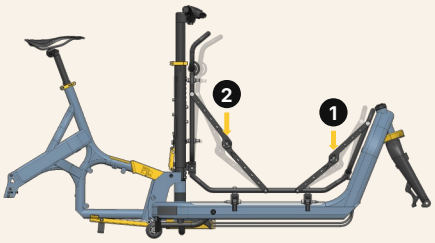

2 **Fold the front basket section (4) and rear basket section (5) down.**

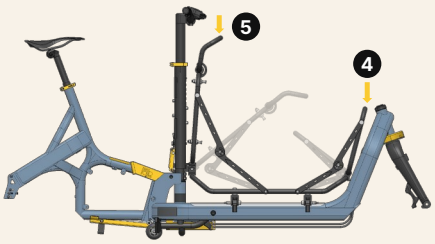

3 **Carefully fold the Basket Pro downward.**

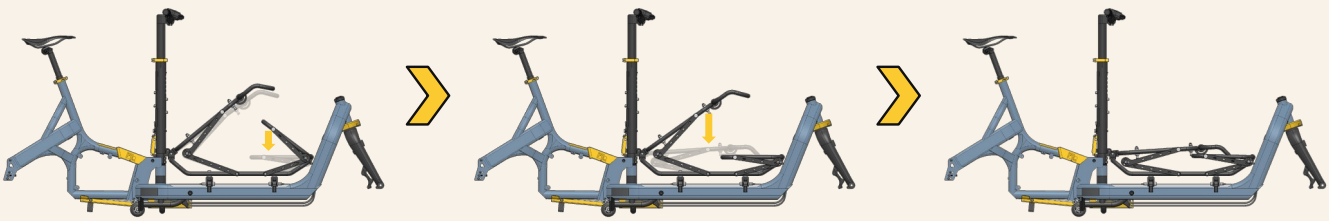

Intermediate position | Continue folding | Fully folded

Component numbers: page 6. The Basket Pro stays attached until it is fully folded.

⚠ **Pinch hazard: Keep hands and fingers clear of joints and locking areas when folding and removing the Basket Pro.**

Fold and remove the Basket Pro · Pin details: page 10

Procedure 2 – Remove the folded Basket Pro

1 **Support the folded Basket Pro. Pull both locking pins (6) outward to release the retaining mechanism.**

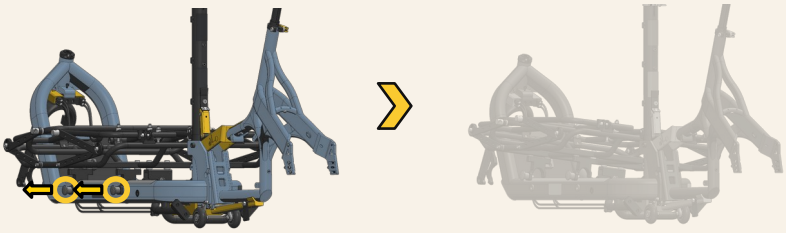

Pull both locking pins outward

2 **Carefully swing the fully folded Basket Pro horizontally outward.**

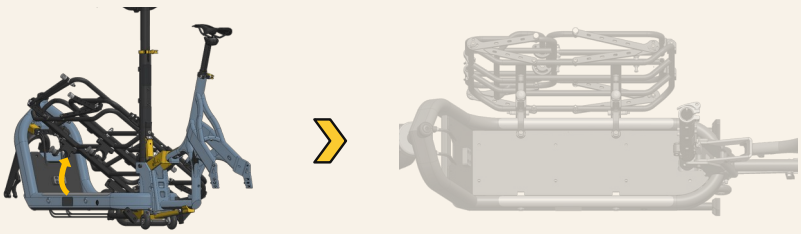

Swing horizontally outward

3 **Support the Basket Pro to prevent it from falling. Hold down the button on each ball-lock pin (7) while pulling the pin out. Remove both pins, then carefully remove the Basket Pro.**

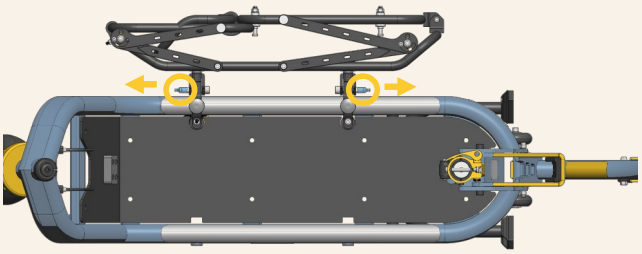

Press the button · Pull out the pin

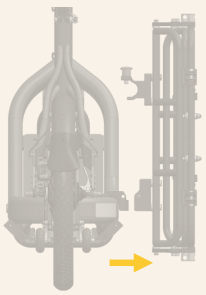

Basket Pro removed

After removal

Put the Basket Pro down securely. Store the ball-lock pins where they cannot be lost and children cannot reach them.

⚠ **Pinch hazard: Keep hands and fingers clear of joints and locking areas when folding and removing the Basket Pro.**

OPERATING AND ASSEMBLY INSTRUCTIONS

Checks before every ride

WARNING

A Basket Pro that is not correctly attached or fully locked may come loose while riding and cause a serious accident.

Checking attachment and locks

When inserting the ball-lock pins and engaging the locking pins, listen or feel for engagement.

- Check both ball-lock pins (7): fully inserted, buttons released. The pins must not pull out without pressing the buttons.
- Check that both locking pins (6) are fully engaged.
- Pull both toggle levers (3) fully upward.
- Press the front basket section (4) and rear basket section (5) downward by hand. Both must resist the pressure and must not fold down.

Do not ride if a lock is incomplete or you are unsure. Do not use the Basket Pro if parts are damaged or if any locks, locking pins or toggle levers do not work correctly.

Wear and damage

- Before every ride, visually inspect the Basket Pro for wear, cracks, deformation and loose connections.
- Regularly check joints, all pins and toggle levers for play, wear or damage.
- Have damaged or stiff components checked promptly by your dealer and repaired if necessary. An inspection is also required after an accident, a fall or unusually heavy loading.

OPERATING AND ASSEMBLY INSTRUCTIONS

Cleaning, care and disposal

Cleaning and care

- Remove dirt with a slightly damp cloth and, if needed, a little mild cleaner.
- Then wipe the Basket Pro dry with a lint-free cloth.
- Keep joints and locking mechanisms free of dirt.

WARNING

Do not use aggressive cleaners, brushes with metal or nylon bristles, sharp or metal objects, or steam or pressure cleaners. These can damage the surfaces.

Maintenance

The joints and locking mechanisms are maintenance-free. The joints use igus plain bearings. Carry out the visual and functional checks on page 14.

Materials and disposal

The basket frame, mounting receiver and fasteners are made of aluminium. The cover is made of water-repellent CORDURA fabric.

Separate packaging materials for recycling: paper and cardboard with waste paper, plastic film with the appropriate recycling collection.

At the end of its service life, take the Basket Pro, including the cover, receiver and fasteners, to a suitable collection point. Follow local disposal requirements.

OPERATING AND ASSEMBLY INSTRUCTIONS

Child seat and infant carrier adapter

Requirements for using the child seat

The child seat is suitable for carrying two children from approximately one year of age. Each child must be able to sit upright independently. Age alone is not decisive.

Weight limits and seat clearance

Specification	Limit / dimension
Child seat: combined weight of children	maximum 42 kg
Permitted weight per child	maximum 21 kg
Seat clearance below the handlebar	65 cm

Observe both weight limits: no more than 21 kg per child and no more than 42 kg for two children combined. Secure each child with a separate harness.

Whether the seat remains suitable depends mainly on the child's weight and size. Follow the child seat instructions.

Babies and younger children

For babies and younger children, use an infant carrier approved for the Basket Pro with a matching adapter for basket mounting. Follow the installation and use instructions for both the adapter and carrier.

Seat clearance under the rain cover

Low position: approx. 59.25 cm. High position: approx. 63.25 cm.
Measured from the seat surface to the inside of the closed rain cover.